ISSN: 2664-9640

Design and Implementation of Online Monitoring System for Medium Voltage Switchgear

Shilei Wang[1]

[1]Wenzhou Polytechnic, Wenzhou, 325035, China.

Abstract

Design a set of on-line monitoring device for medium voltage switchgear. The hardware will use the cooperation of MDC4 intelligent monitoring unit, electrical instruments and sensors to realize monitoring, complete data acquisition and display, and so on. In the aspect of software, through the WinCS control system, the engineer station software WinConfig is used to design and complete the monitoring system program debugging of the medium voltage switchgear, and WinHMI is used to monitor and display the power installed with the MDC4 intelligent monitoring unit, so as to monitor and collect the power such as the VD4 vacuum circuit breaker, and finally realize the on-line monitoring of the medium voltage switchgear.

Keywords

Medium voltage switchgear, WinConfig, on-line monitoring.

1. The Overall Framework of the Monitoring System

As one of the important electrical equipment in the distribution network, medium and low voltage switchgear is responsible for the opening and closing, control and protection of distribution lines, and its safe operation will directly affect people's work, study and quality of life. In order to improve the operation reliability of the switchgear, reduce the fault risk and reduce the economic loss caused by the fault, all kinds of monitoring equipment can be installed in the switchgear to monitor its operation parameters on-line, and through the analysis and processing of the monitoring data, realize its operation state detection and abnormal condition diagnosis, so as to ensure that the operation and maintenance personnel can find the problems in time and provide them with decision-making basis. Therefore, in view of the common fault types of switchgear, it is of great significance to monitor and analyze the characteristics of switchgear in order to realize the fault detection and classification of switchgear.

The system adopts ABB's MDC4 intelligent monitoring unit, RE_615 feeder protection relay and temperature sensor to realize on-line monitoring and monitoring of the fault-prone components such as busbar, circuit breaker and disconnect switch contacts, transformers (including cable connectors) in the middle and low voltage switchgear of the substation. The fault signal is uploaded to the monitoring host through the RS485 bus, and the data is displayed through WinHMI. The working principle diagram of the system is shown in Figure 1. MDC4 is an intelligent monitoring and control unit that integrates intelligent real-time temperature monitoring and diagnosis, intelligent circuit breaker characteristic monitoring and diagnosis, and intelligent motor drive control and protection. REF_615 is a feeder protection relay for selective short circuit, overcurrent and ground fault protection in accordance with IEC 61850. It is suitable for all types of neutral ungrounded systems, resistance grounded systems and compensation systems.

The on-line monitoring system of medium voltage switchgear should be set up. In order to facilitate debugging, the role of a PC in the system is both an engineer station and an operator station. It uses WinAdmin to complete the resource ID setting and the WinHMI resource ID

ISSN: 2664-9640

setting. The WinControl 1800 controller is used as the main equipment of the process control station in the network. The hardware configuration is realized by using the "hardware structure" of Winconfig, and the position of the actual equipment of the system in the network is determined.

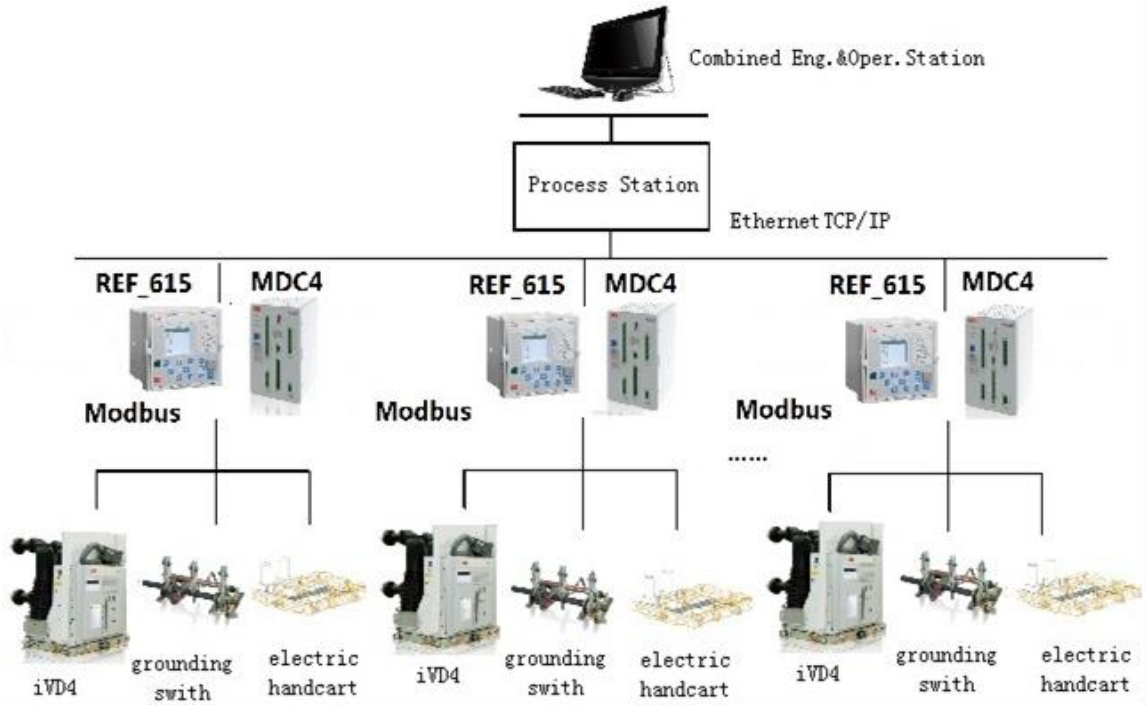

Figure 1. Block diagram of the working principle of the system

2. Configuration Design of on-line Monitoring system

2.1. Project Tree Construction and Hardware Configuration

In order to facilitate programming, query and maintenance, the form of directory tree is used for planning and management. The main task of constructing a project programming environment is to create project trees and objects. This task mainly includes creating projects and objects according to the specifications of the system design, and setting the parameters of each object correctly. The project tree contains D-PS process station PS1 and D-OS operator station OS. The process station contains a list of running management programs, a list of REF_615 programs, and a list of MDC4 programs. In the "USRTask" task list of "PS", there are two options that can be created, namely "Task" and "default Task". Select "tasks", create a program list "PL" and create a new "FBD" program. The program list involves FBD programs such as circuit breaker characteristics, electric handcars, system time, etc. In the operator station OS, the FGR flow chart display is included for the operation and monitoring of the process object.

Before programming, we also need to configure the hardware, including PS process station, ModBus master station, ProfiBus module 1830, Winmatian slave device WinIO 1000 and CI1020 and DO1041B modules. In the process station "WNC 1800 L", it need to insert the "FP 1830 profibus" module and the "ModBus master station", then continue to insert the "Profibus master station" under the "FP 1830" module, and insert the slave station "FDT12" below the master station. The hardware configuration structure shown in Figure 2.

ISSN: 2664-9640

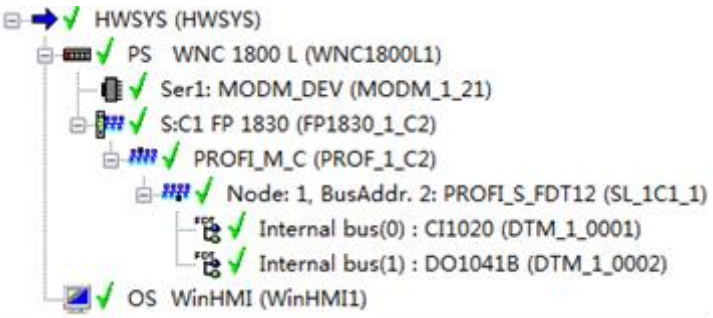

Figure 2. Hardware configuration structure

2.2. Page Numbers

The first thing to do is to write the function of opening and closing of vacuum circuit breaker, which is used here to write a single coil function block. Determine the name, interface, slave address and coil address, timeout, etc. Then create a new Bool variable to complete the key program of opening and closing. In order to realize the telecontrol function of the electric hand car, it is necessary to use IO editing and custom function blocks to confirm the corresponding position of the telecontrol point. Figure 3 key programs of opening and closing and rolling in and out. A01 in the picture is the input cabinet, A02 is the feeder cabinet, A03 is the bus cabinet, A05 is the feeder cabinet, A06 is the feeder cabinet.

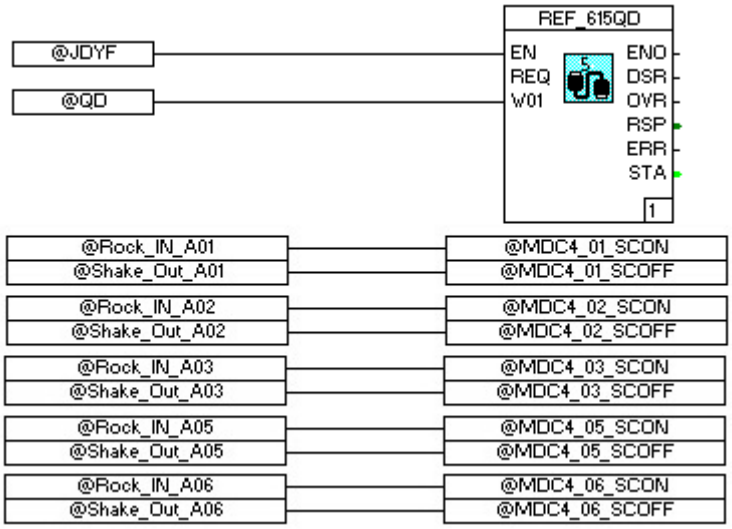

Figure 3. Key programs of opening and closing and rolling in and out

Figure 4 shows the program written in the user function block for the electric handcar to roll in and out. Because the electric handcar needs to be given an interlocking program to prevent it from shaking out when it is rolling in, even if the shaking command is issued, it cannot receive the shaking instruction. Therefore, the ladder diagram programming method is used to realize this function in the user function block. Therefore, the ladder diagram programming method is used to realize this function in the user function block.

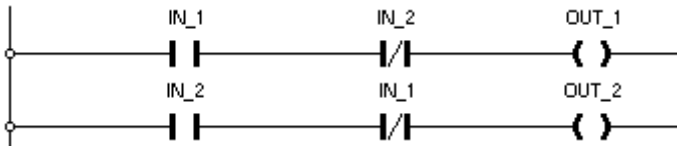

Figure 4. Interlock program of electric handcar

ISSN: 2664-9640

2.3. Design of Monitoring Program

The read register function block (MODM_R1R) is used in WinConfig, the function block name, interface, slave station address and register address are set, the timeout time is changed, the hold register is selected, and the count is written according to the number of points to be tested. Read the word-type data output from the register module, so the data type conversion function is also needed. First, the word-type variable is converted into int-type variable, and then the int-type variable is converted into REAL-type variable. Then, consider the direct resolution relationship between the variables and the read values. For example, to collect the temperature alarm threshold TB_fz, which is a real variable, we should not only convert the data type, but also calculate the resolution of the converted value.

2.3.1. REF_615 Feeder Protector

REF_615 is a feeder protection relay for selective short circuit, overcurrent and ground fault protection in accordance with IEC 61850. It is suitable for all types of neutral ungrounded systems, resistance grounded systems and compensation systems. The main data collected by WinCS are three-phase current, phase voltage, line voltage and total power. In figure 5, the function of the REF-A function block is to read the three-phase current, zero sequence current and zero sequence voltage of the equipment; the function of the REF-V function block is to read the phase voltage and line voltage of the equipment; the REF-W reads the active power, reactive power, apparent power, and frequency of the equipment; and REF-JS is reading the opening and closing times of the circuit breaker. The data to be collected for each function block is marked in the label in Figure 5. REF615_1_YH is the user function block, which establishes a user function block under the software (Software) project. In this function block, the input and output pins are designed to complete the data conversion and operation, and there are the input and output pins before and after the REF615_1_YH in the diagram.

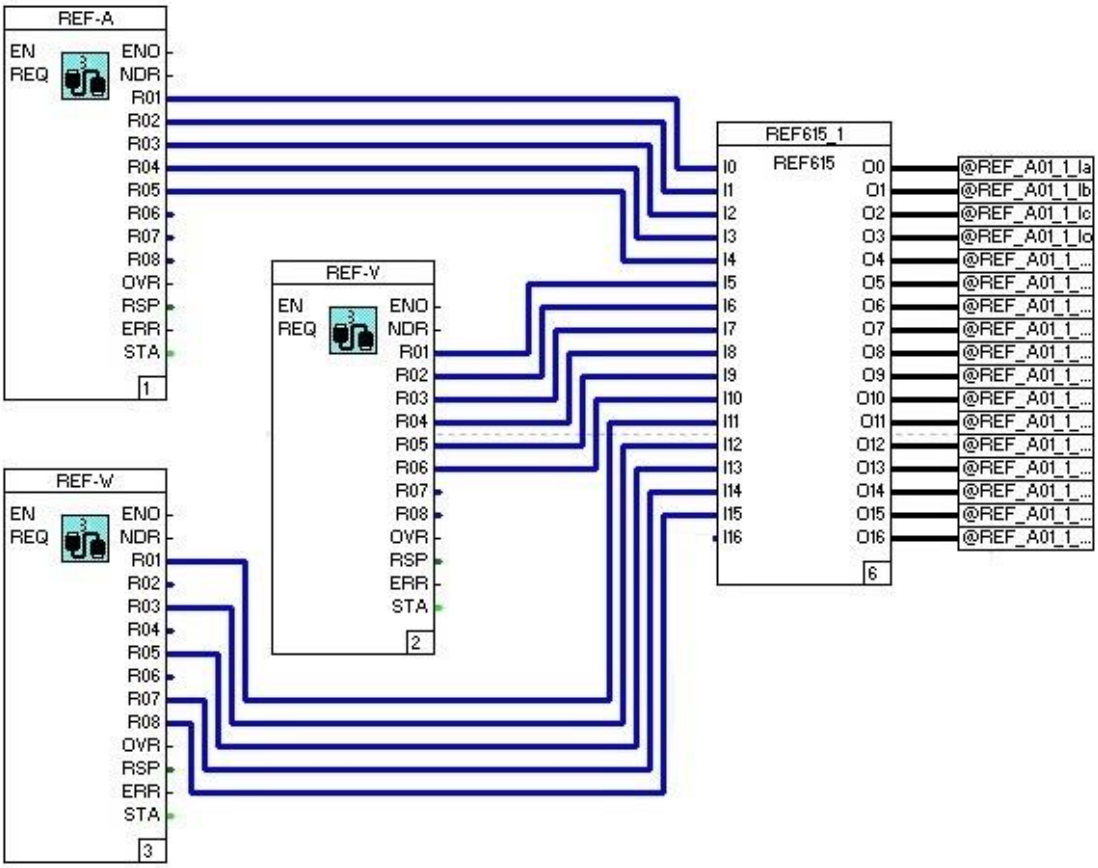

Figure 5. REF615 data acquisition program

ISSN: 2664-9640

2.3.2. MDC4 Intelligent Monitoring Unit

MDC4 is an intelligent monitoring and control unit that integrates intelligent real-time temperature monitoring and diagnosis, intelligent circuit breaker characteristic monitoring and diagnosis, and intelligent motor drive control and protection. Suitable for intelligent solutions of iVD4, iUniGear and ABB medium voltage switches, including intelligent temperature real-time monitoring and diagnosis (TRM), intelligent circuit breaker monitoring and diagnosis (ICM) and intelligent motor drive control and protection (MCS). The data collected in Figure 6 are the average current and voltage of the circuit breaker energy storage, closing and opening coil of the MDC4 intelligent monitoring unit, the energy storage, closing and opening time of the circuit breaker, the temperature of the upper and lower contact arm of the circuit breaker and the temperature alarm of the upper and lower contact arm of the circuit breaker. These data are all read out in the "write variable" of the user function block, and can also be displayed by graphic display FGR.

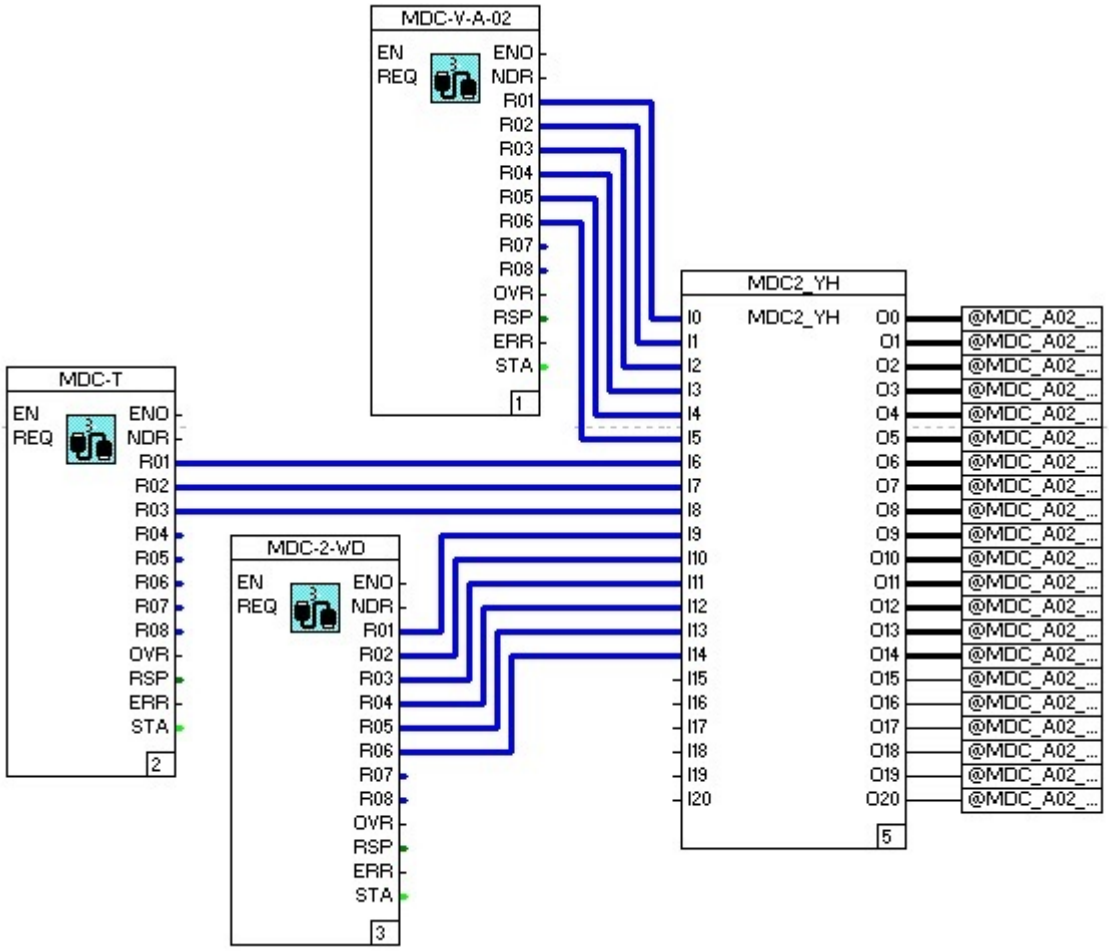

Figure 6. MDC data acquisition program

3. Picture Configuration

The editing of the screen is finally drawn in "FRG", and the amount of data, state and switch that need to be displayed are selected before drawing. When drawing a picture of the amount of data, draw a box showing the amount of data with the "literal and digital display" in the graphic editing toolbox.

Insert the variable you want to display in the display variable, and adjust it according to the display in the parameters when you need to edit the background drawing of the display box. In order to make the picture beautiful, neat and clear at a glance, it is necessary to arrange the

ISSN: 2664-9640

status lights and data lights one by one. After finishing the screen showing the amount of data, it is the state quantity. Status display timely digital logic in the "1" and "0", alarm or no alarm. The display in the screen is the light on or off, and the conversion of lights of different colors. When drawing the state quantity display, draw the graph first, but it does not have the function of inserting variables. After drawing the graphics, use the "graphic symbols" in the toolbox to connect the graphics and variables to complete the animation connection. Add variable names and units to the macro with text, and then sort and sort and add buttons and text to display the monitoring screen of the completed REF_615, as shown in Figure 7. The picture design method of MDC4 intelligent monitoring unit is basically the same.

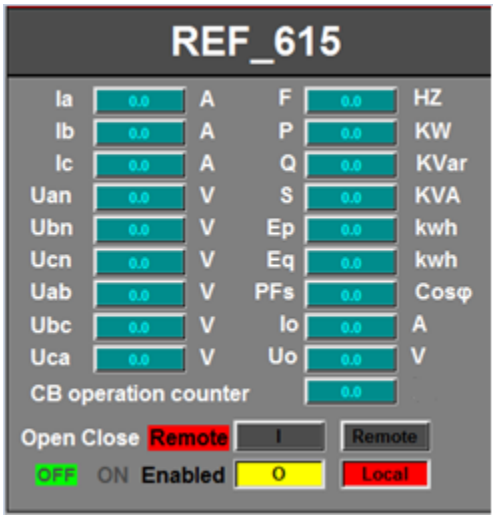

Figure 7. REF_615 screen configuration

4. Configuration Debugging of Medium Voltage Switchgear

First of all, the closing and opening test of the vacuum circuit breaker of the switchgear is carried out. before the test, it is confirmed whether the electric carrier of the circuit breaker is in the test position, and then it is confirmed twice with the position display of the hand car in the monitoring screen to ensure that the monitoring is synchronized with the scene. Adjust the mode to the remote mode, click the closing button, complete the closing of the vacuum circuit breaker, and then click the opening, after the opening of the vacuum circuit breaker is completed. The mode is adjusted to the spot, and the opening and closing test of the vacuum circuit breaker is completed.

Next, the tele-in and telecontrol test of the electric handcar is carried out, first of all, confirm that the vacuum circuit breaker is in the opening state, the monitoring is consistent with the scene, click the remote in button, and then click OK, the circuit breaker electric handcar is running, and then the handcar is remotely in. after the monitoring and the scene have confirmed that the electric handcar is in the working position, click the telecontrol button, and then click to confirm that the circuit breaker electric handcar is running, the handcar is remote, and the electric handcar telecontrol test is completed.

5. Conclusion

This paper is the design of on-line monitoring system based on medium voltage switchgear. In the hardware design, two advanced monitoring and control products, REF_615 relay protector and MDC4 intelligent monitoring unit, are adopted to accurately monitor and control the VD4 vacuum circuit breaker, circuit breaker electric handcar and circuit breaker grounding switch of the medium voltage switchgear, and the data and instruction signals are transmitted through

ISSN: 2664-9640

RS_485 communication to improve the operation reliability of the switchgear and reduce the fault risk.

The design of the program is based on the WinCS system, using convenient and fast operation modules, such as read register module, read coil module, write register module, write coil module, data conversion module, etc., to make the on-line monitoring system for medium voltage switchgear. It realizes the functions of data monitoring, fault alarm, state display and state control of the medium voltage switchgear, provides a more intuitive basis for inspection and repair of the medium voltage switchgear, and reduces the heavy work of daily repeated inspection. The reliability of the operation of the medium voltage switchgear is improved, the fault risk is reduced, the economic loss caused by the fault is reduced, and the data can be saved according to the obtained data. Facilitate future inquiry and analysis, prevent the occurrence of errors, and provide an important basis for protecting the safety of switchgear.

Acknowledgements

Project support: The "School-Enterprise Cooperation Project" of visiting Engineers in Colleges and Universities of the Department of Education of Zhejiang Province in 2018, the project number: FG2018056.

References

[1] Jiang Wandong, Zhou Haitao, Shen Keming, et al: Development and application of medium voltage intelligent circuit breaker control system,Electrical Engineering, (2019)No.1,p.101-105.

[2] BAI Ming,ZhANG Yue: Application Research and Analysis of Intelligent Medium Voltage Switchgear in Intelligent Substation,Electric Drive Automation, Vol. 41 (2019)No.4,p.38-40.

[3] ZHAO Rongkang: Research of Intelligent Circuit Breakers Controller Based on Bluetooth Communication,Electrical&Energy Management Technology, (2016) No.18,p.33-36.

[4] WANG Shi-lei,WU Bi-miao: Development of Intelligent Low-voltage Electrical Apparatus Experiment Island Based on WinCS Control,Metallurgical Industry Automation,Vol.43(2019) No.3,p.35-39.

[5] Ge Yun,Guo Cheng,Zhang Haojun, et al: A development of intelligent alarm device for high-voltage switchgear based on ARM,Electrical Engineering, (2019)No.12,p.51-54.

[6] SUI Bin,LIU Wei: Intelligent Substation and Distribution Monitoring System Based on SIMATIC WinCC, Modern Architecture Electric, Vol. 9 (2018)No.11,p.21-23.